BottleBag Beach
(German)

204 mm

Front

480x325mm

Back

480x325mm

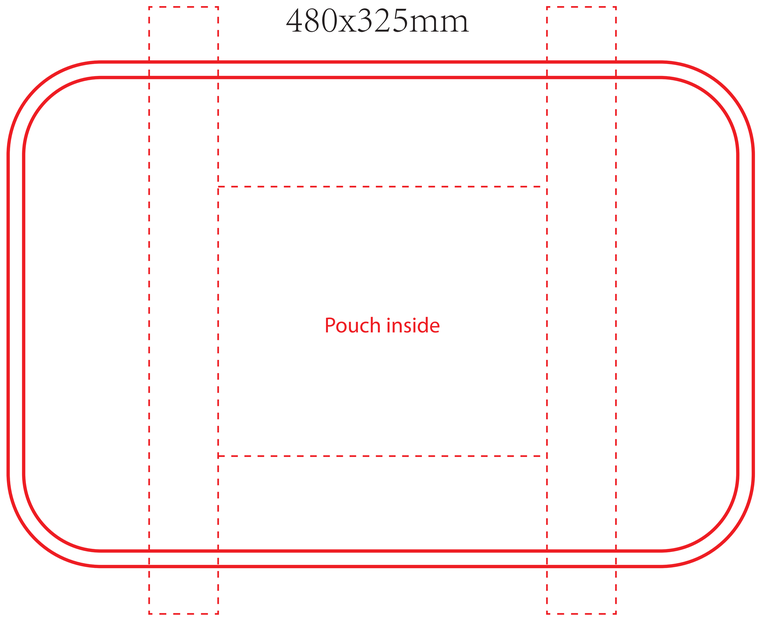

345x240mm

Pouch outside

Zipper

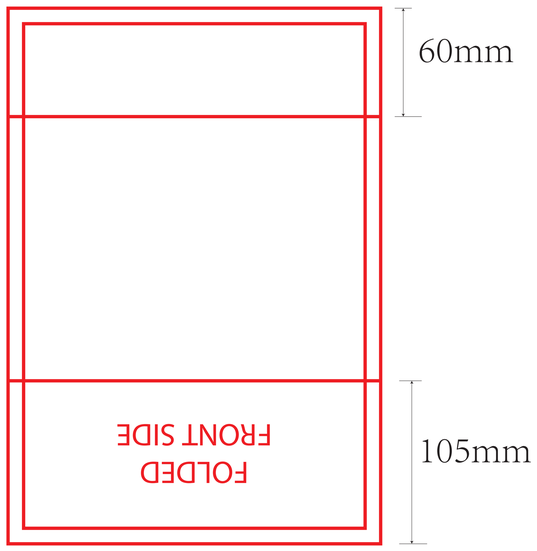

Zipper

Pouch inside

Zipper

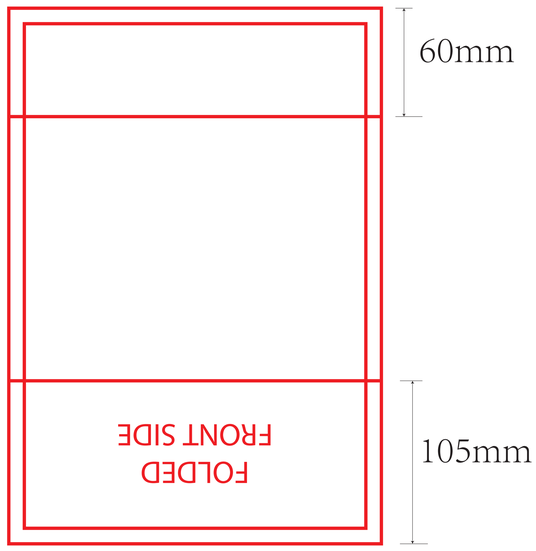

Zipper

700x120mm

Top left

700x120mm

Top right

850x230mm

Bottom bag

Bag colour
- CMYK/FC
- PMS: XXXX

Print colour
- CMYK/FC
- PMS: XXXX

Side label colours:
- PMS: 376
- White

Handles colour
- PMS: 376

Care label
(inside)
2x3,5 cm

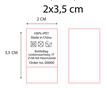

Material Hangtag BottleBag

- Kraft
- Non-kraft

Hangtag BottleBag
Size 5x12 cm

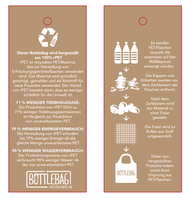

A:Tolerance of placing graphics on the bottlebag is +/- 10 mm.
B: We are not able to match Pantone color on CMYK artwork.
C: Minimum readable size of fonts is 8 pt.
D: Physical sample for approval is possible with acceptance of surcharge of € 50,00
E: We are not able to match Pantone color on woven side label.
F: Size of the bag will be 45 cm x 68 cm when assembled.